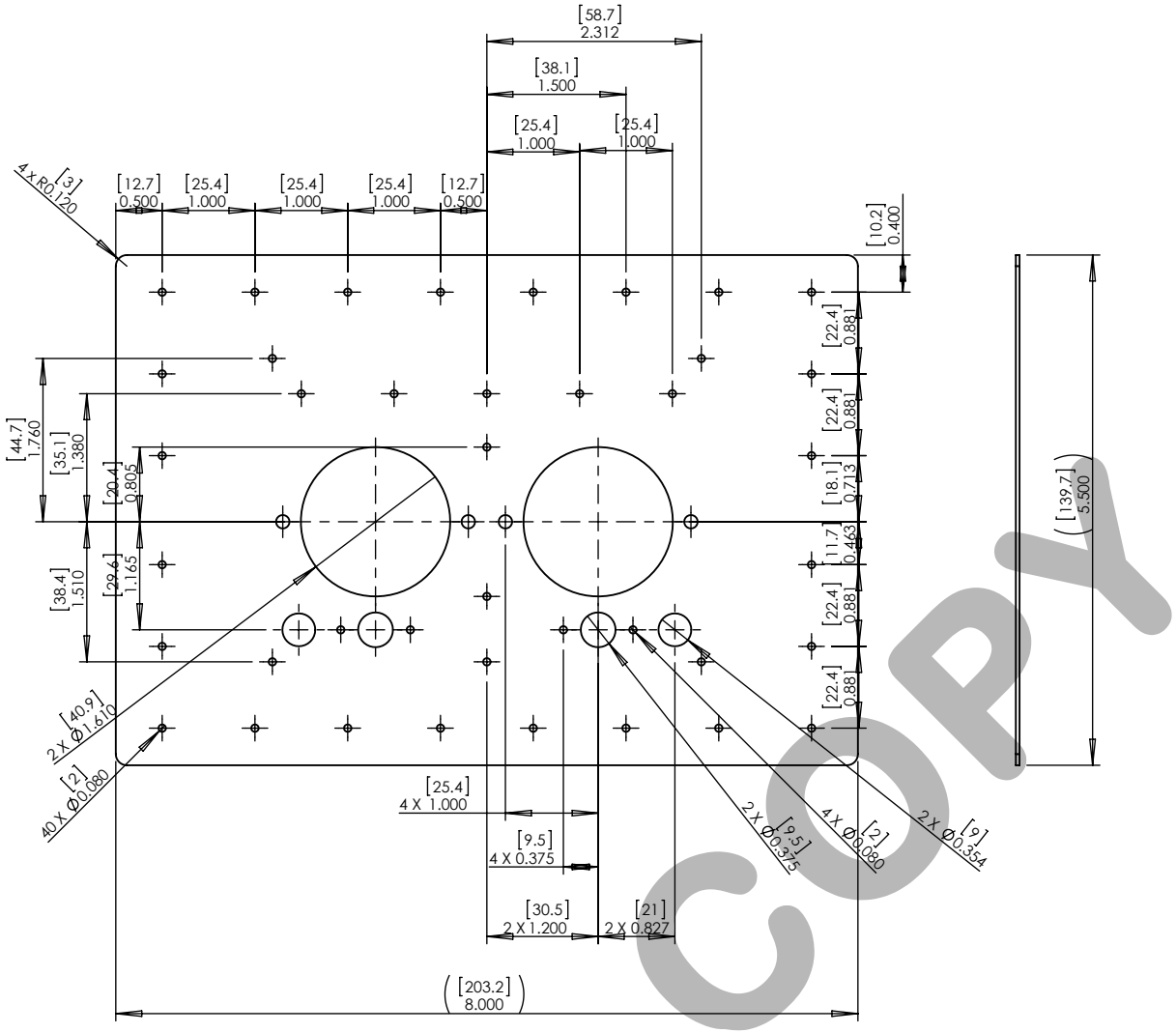

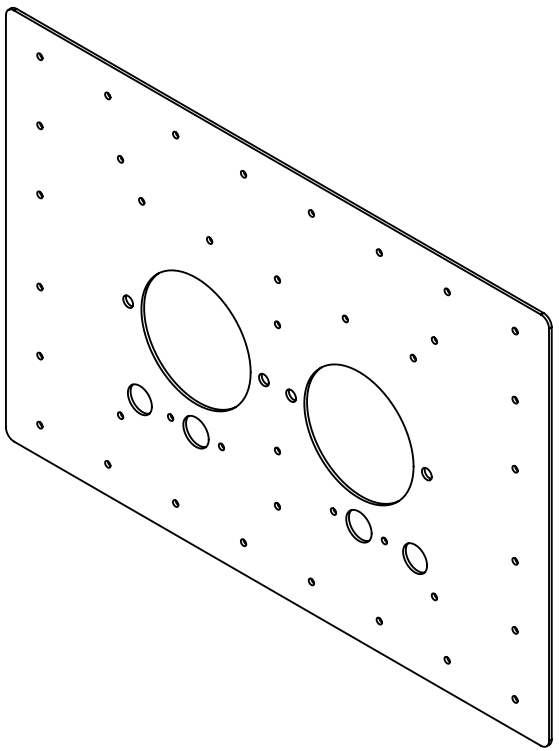

COPY

MATERIAL:
0.040 THICK, ALUMINUM SHEET (2024-T3) ALCLAD
ALTERNATES:
0.040 THK TO 0.050, ALUMINUM (2024-T3, 2024-T4, 6061-T4, ASTM B 209, AMS-QQ-A-250/4/6,)
OR ACCEPTABLE ALTERNATE PER FAA AC 43.13

UNLESS OTHERWISE SPECIFIED:

REMOVE BURRS & SHARP EDGES
DIMENSIONS ARE IN INCHES
TOLERANCES:
ANGULAR: MACH ±2°
TWO PLACE DECIMAL ±.010"
THREE PLACE DECIMAL ±.005"

PROPRIETARY AND CONFIDENTIAL

THE INFORMATION CONTAINED IN THIS DRAWING IS THE SOLE PROPERTY OF TANIS AIRCRAFT PRODUCTS. ANY REPRODUCTION IN PART OR AS A WHOLE WITHOUT THE WRITTEN PERMISSION OF TANIS AIRCRAFT PRODUCTS IS PROHIBITED.

SW FORMAT REV A

CURRENT REV APPROVAL		Dirk N. Ellis	DRAWN BY	GDO	JUL-06-2016	TITLE: DOUBLER - PLUG 2 PLACE
			CHECKED BY	DNE	JUL-06-2016	
			DO NOT SCALE DRAWING			P/N: TD03151
			TANIS AIRCRAFT PRODUCTS GLENWOOD MUNICIPAL AIRPORT GLENWOOD, MN 56334 USA +1.952.224.4425			SPEC: N/A
A	INITIAL RELEASE	JUL-06-2016	GDO			SUPERSEDES: N/A
REV	CHANGE	DATE	INIT			DRAWING: 03151 SHEET 1 OF 1

5 4 3 2 1